KUS550 Ultrasonic Sensor

Instruction Manual

TEL: +86-17719566736 EMAIL: support@kacise.com
ADD: 2nd Building, Tianyuan International Mansion, High-tech Zone, Xi'an City, Shaanxi Province, China

Table of Contents

1. Features 3
2. Dimension 3
3. Electronic Interface and Signals Definition 3
4. Parameter 6
5. Description of Sensor Operation Mode 6
6. Description of Sensor Functions 7
7. Serial Port Setting Output Example 8
8. 8 Kinds Of Switch Output Logic Diagram 9
9. Ordering Information 10

1. Features

- High sensitivity.
- Compact and robust structure.
- IP65-IP68 high protection rating.
- Corrosion resistant casing, suitable for corrosive medium and application

2. Dimension

Unit in the diagram is mm.

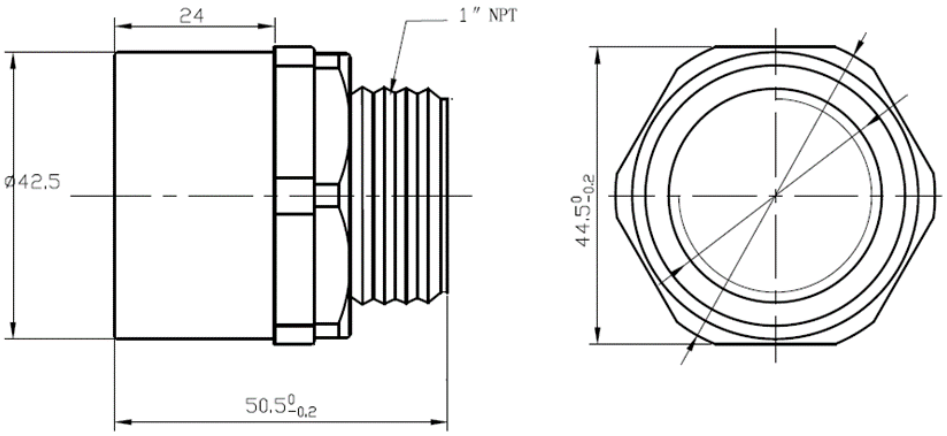

3. Electronic Interface and signals definition

3.1 Analogue output type wiring diagram

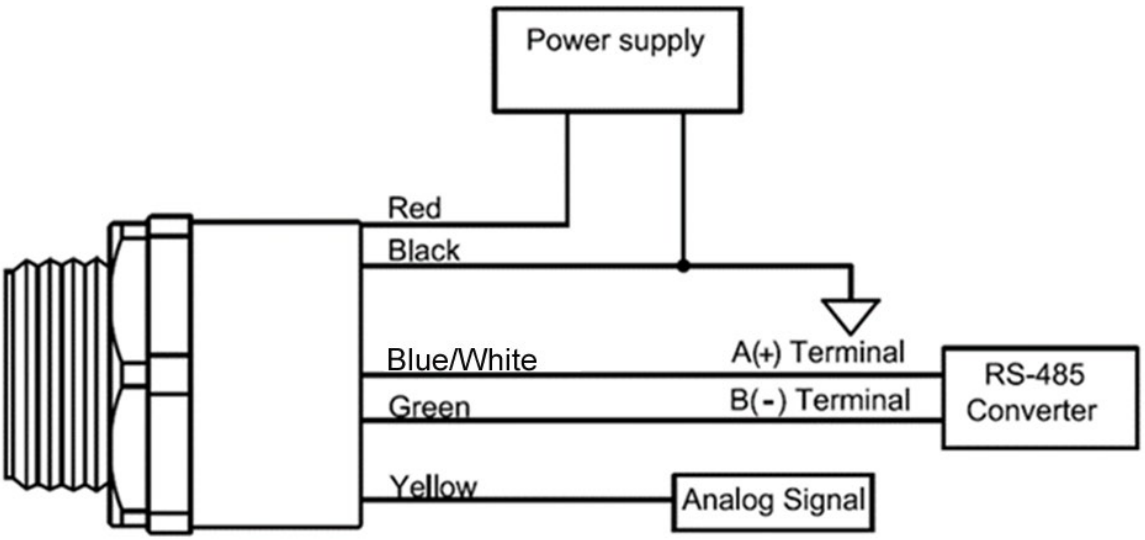

Color	Wire	Description	Note
Red	1	Power Supply	Single RS485 output with low power: 3.3V-30V Analog supply: 12V-30V
Black	2	GND	
Yellow	3	Analogue	Low power version has no analog output
Blue/White	4	RS485A+/UART_TXD	Blue wire in UART version is sensor TXD
Green	5	RS485B-/UART_RXD	Green wire in UART version is sensor RXD

3.2 Single switch output type wiring diagram

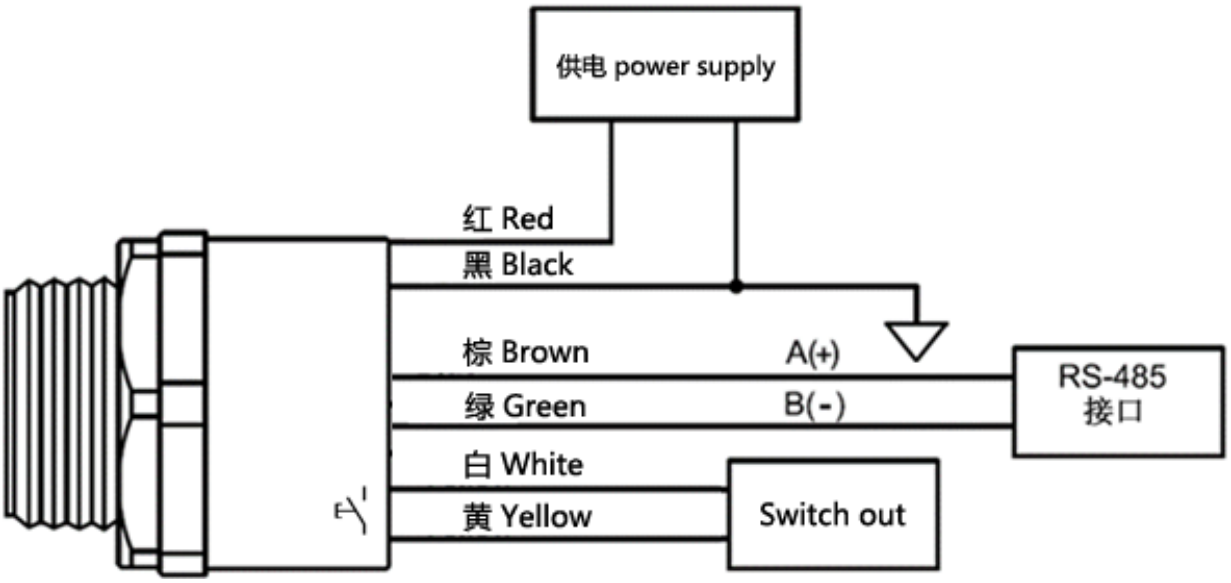

Color	Wire	Description	Note
Red	1	Power Supply	3.3V-30V
Black	2	GND	
Yellow	3	Switch	Switch terminal, load capacity 500mA 60V, supports up to two independent logic switch outputs.
White	4	Switch	
Brown	5	RS485A+/UART_TXD	Brown wire in UART version is TXD
Green	6	RS485B-/UART_RXD	Green wire in UART version is RXD

3.3 Double switch output type wiring diagram

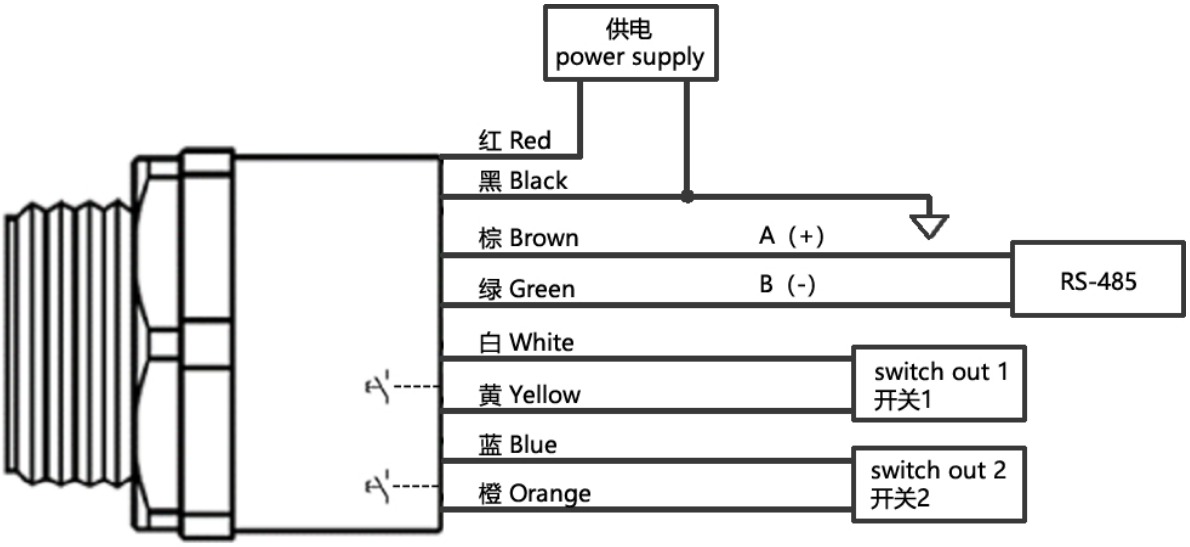

Color	Wire	Description	Note
Red	1	Power Supply	3.3V-30V
Black	2	GND	
Yellow	3	Switch-1	Switch terminal, load capacity 500mA 60V, supports up to two independent logic switch outputs.
White	4	Switch-1	
Brown	5	RS485A+/UART_TXD	Brown wire in UART version is TXD
Green	6	RS485B-/UART_RXD	Green wire in UART version is RXD
Blue	7	Switch-2	Switch terminal, load capacity 500mA 60V, supports up to two independent logic switch outputs.
Orange	8	Switch-2	

4. Parameter

Model: KUS550	
Measuring Range	1m 3m (4m customizable)
Blind Zone*	0~0.15m@1m, customizable small blind zone version: 0~0.12m 0~0.25m@3m, customizable small blind zone version: 0~0.2m (The small blind zone version requires a power supply voltage of 12V or above)
Supply Voltage	3.3 ... 30 VDC, 12~30VDC (analog output), ripple 10 %SS
Working Current	⩽ 45 mA (fastest measurement speed), typical power consumption 5mA
Output Signal	1. Programmable analog output 0-10V/4-20mA 2. RS485/UART communication 3. Relay switch output/NPN/PNP
Measurement Accuracy	0.5 %~1%F.S.
Temp. Compensation	Yes

Working Conditions

Working temperature	-25…70℃ (248...343K)
Storage temperature	-40…85℃ (233...358K)

Other Instructions

Electrical connection	Default 1.5m long PVC cable
Protection class	IP65 (IP68 customizable)
Shell material	PVDF (default) / PTFE / ABS

*The area within the blind zone is an unstable working zone, and it is not recommended to operate within this range.

5. Description of Sensor Operation Mode

If a specific working mode is required, it can be set before leaving the factory, or it can be connected to the sensor through the USB to 485 module and set through the provided Modbus Poll software.

The sensor has four working modes:

Mode 0: This mode is the default mode. The sensor works normally, keeps measuring and refreshing the measurement results to the register.

Mode 1: This mode is silent mode. The sensor will start measuring only when the host

computer sends a query command.

Mode 2: This mode is sleep mode. The sensor will be awakened for 50ms only if a modbus query command with a preamble is sent. Modbus query commands and modification commands can be sent within 50ms. After the sensor completes the measurement and reports the measurement results, it will enter sleep mode again. If communication is required again, the preamble and modbus command need to be sent.

Mode 3: This mode is delay mode. Users can modify the corresponding delay register to control the time period of sensor measurement.

Please refer to the KUS550 Modbus protocol manual when modifying the mode.

6. Description of Sensor Functions

Analogue / switch output

The analog/switch output can be set through RS485, and the sensor can work in 8 modes. The specific reference is as follows:

Step 1, connect to the host computer through the serial port debugging assistant or modbus poll debugging assistant.

Step 2, set a near reference distance point.

Step 3, set a far reference point

Step 4, set the output voltage or current of the near reference point.

Step 5, set the output voltage or current of the far reference point.

Step 6, set the analog output to switch characteristic selection.

Step 7, set the analog output to linear output or switch output selection.

Step 8, reset the sensor to make the new parameters effective.

The 8 working modes of switch output are as follows:

1: Window mode is on by default

2: Window mode is off by default

3: Single point mode is on by default

4: Single point mode is off by default

5: Single point hysteresis mode is on by default

6: Single point hysteresis mode is off by default

7: Presence detection mode is on by default

8: Presence detection mode is off by default

RS485 output data

RS485 output data is in MODBUS-RTU format. Please refer to the KUS550 Modbus protocol manual for details.

7. Serial port setting output example

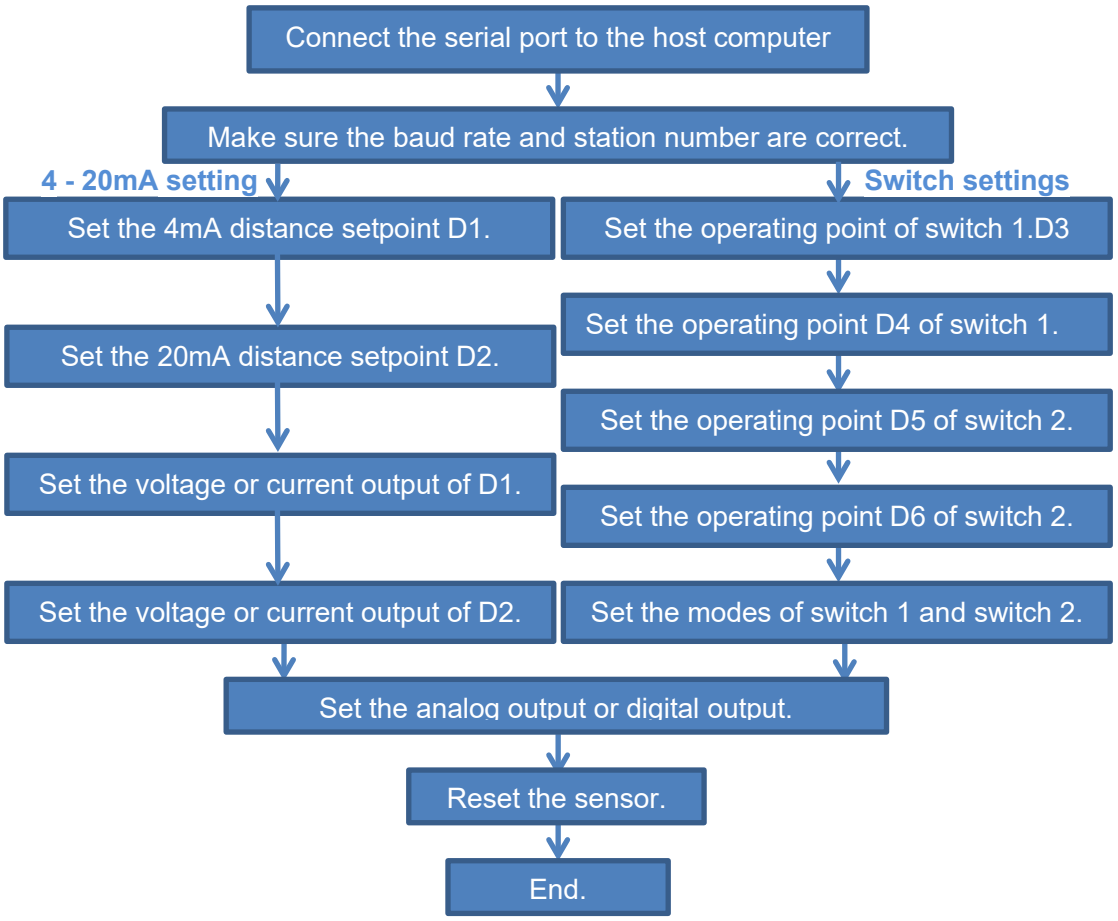

Attention:
This step requires referring to the protocol manual.
The values of D1…D6 cannot exceed the measurement range. That is to say, D1…D6 must be between the blind zone and the maximum measuring range to be valid.

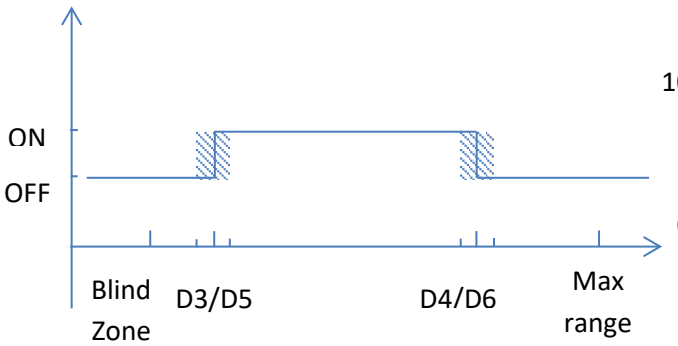

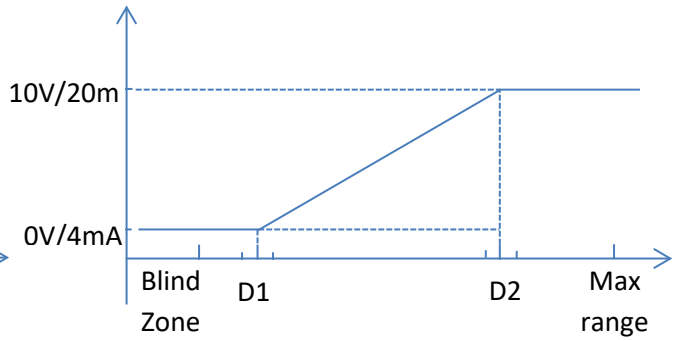

Default 5% Hysteresis

Linear output result

8. 8 kinds of switch output logic diagram

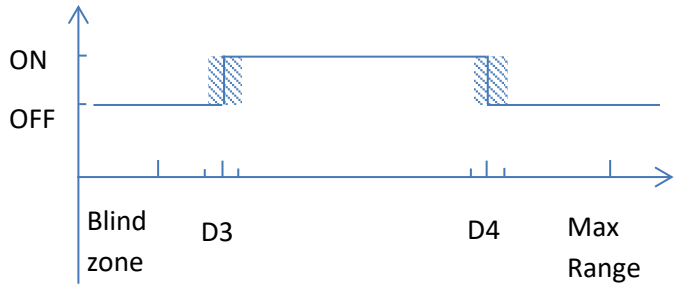

: Default 5% Hysteresis gap

1: Window NO Switch output

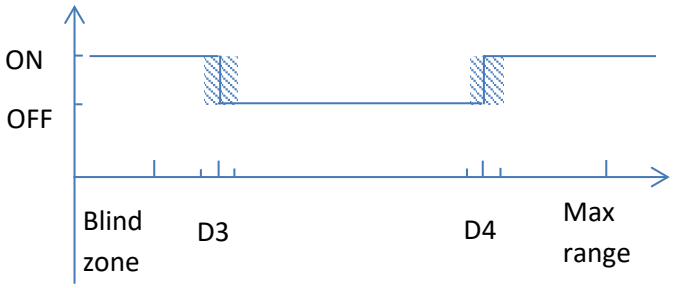

: Default 5% Hysteresis gap

2: Window NC Switch output

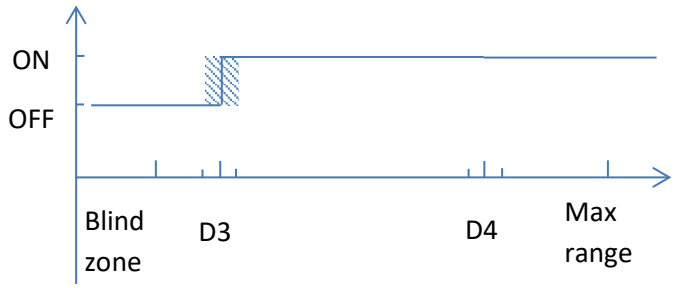

: Default 5% Hysteresis gap

3: Single-point NO Switch output

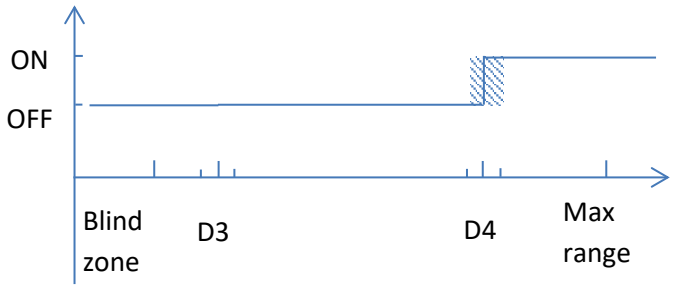

: Default 5% Hysteresis gap

4: Single-point NC Switch output

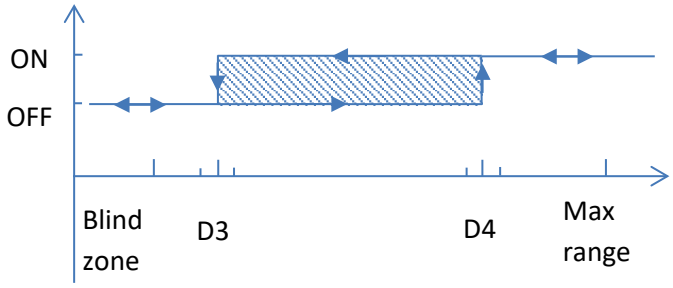

: Hysteresis gap is D4-D3

5: Single-point NO Switch output with huge hysteresis gap

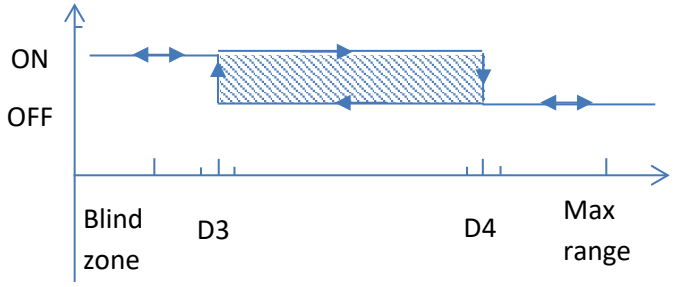

: Hysteresis gap is D4-D3

6: Single-point NC Switch output with huge

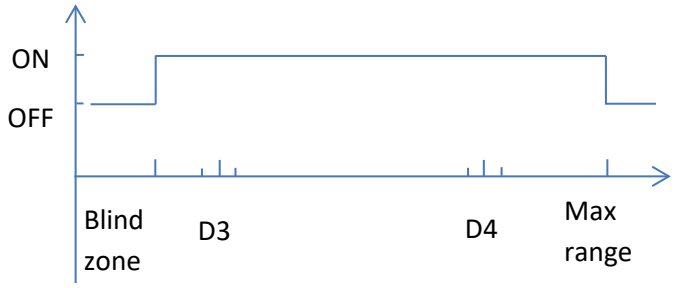

7: Target detection NO switch output

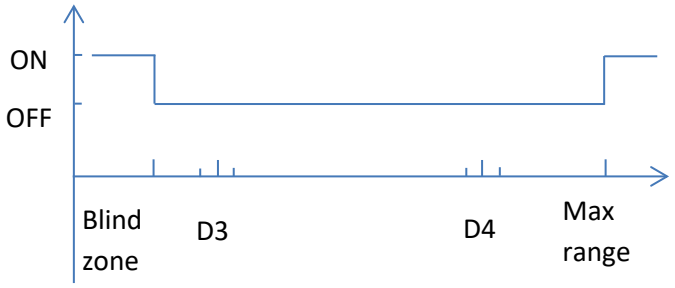

8: Target detection NC switch output

9. Ordering information

KUS	Model	Output	Max range	Description
	550			
		Switch-1	Relay/NPN/PNP. “Switch-1” indicates selecting one-way switch, and “Switch-2” indicates selecting two-way switches.	
		0-10V	Analog output: 0 - 10V	
		0-5V	Analog output: 0 - 5V	
		0-3V	Analog output: 0 - 3.0V	
		4-20mA	Analog output: 4 - 20mA	
		RS485	RS485 output with Modbus RTU protocol	
		TTL	UART TLL Modbus RTU	
			XXX mm	“XXX mm” means Max. measuring distance. (Default 3000mm, 1000mm/4000mm can be customized)
KUS	550	RS485	3000mm	KUS550 RS485 3000mm